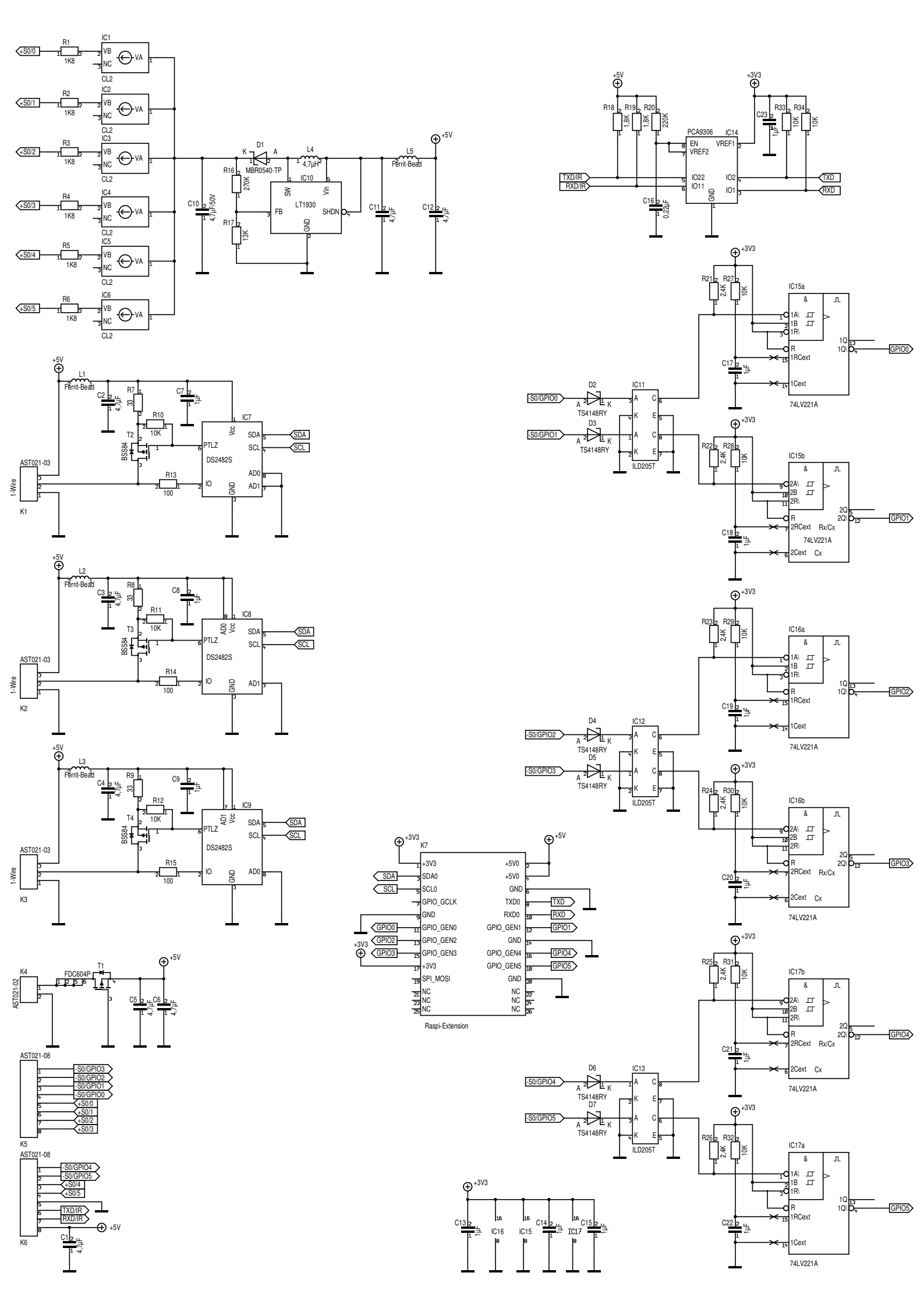
+S0/0
+S0/1
+S0/2
+S0/3
+S0/4
+S0/5
R1 1K8
R2 1K8
R3 1K8
R4 1K8
R5 1K8
R6 1K8
IC1
IC2
IC3
IC4
IC5
IC6
VB
NC
VA
CL2
D1 MBR0540-TP
L4 4,7µH
L5 Ferrit-Bead
+5V
R16 270K
R17 13K
IC10 LT1930
SW
Vin
FB
SHDN
GND
C10 4,7µF/50V
C11 4,7µF
C12 4,7µF
+5V
R18 1,8K
R19 1,8K
R20 220K
PCA9306
IC14
EN
VREF2
VREF1
IO22
IO11
IO2
IO1
GND
C16 0,22µF
+3V3
C23 1µF
R33 10K
R34 10K
TXD/IR
RXD/IR
TXD
RXD
+5V
L1 Ferrit-Bead
C2 4,7µF
R7 33
C7 1µF
R10 10K
T2 BSS84
IC7
Vcc
PTLZ
DS2482S
IO
GND
SDA
SCL
AD0
AD1
R13 100
AST021-03
1-Wire
K1
+5V
L2 Ferrit-Bead
C3 4,7µF
R8 33
C8 1µF
R11 10K
T3 BSS84
IC8
AD0
Vcc
PTLZ
DS2482S
IO
GND
SDA
SCL
AD1
R14 100
AST021-03
1-Wire
K2
+5V
L3 Ferrit-Bead
C4 4,7µF
R9 33
C9 1µF
R12 10K
T4 BSS84
IC9
AD1
Vcc
PTLZ
DS2482S
IO
GND
SDA
SCL
AD0
R15 100
AST021-03
1-Wire
K3
K4
AST021-02
FDC604P
T1
+5V
C5 4,7µF
C6 4,7µF
AST021-08
K5
-S0/GPIO3
-S0/GPIO2
-S0/GPIO1
-S0/GPIO0
+S0/0
+S0/1
+S0/2
+S0/3
AST021-08
K6
-S0/GPIO4
-S0/GPIO5
+S0/4
+S0/5
TXD/IR
RXD/IR
+5V
C1 4,7µF
+3V3
K7
+3V3
SDA0
SCL0
GPIO_GCLK
GND
GPIO_GEN0
GPIO_GEN2
GPIO_GEN3
+3V3
SPI_MOSI
NC
NC
NC
+5V0
+5V0
GND
TXD0
RXD0
GPIO_GEN1
GND
GPIO_GEN4
GPIO_GEN5
GND
NC
NC
NC
SDA
SCL
GPIO0
GPIO2
GPIO3
TXD
RXD
GPIO1
GPIO4
GPIO5
Raspi-Extension
+3V3
C13 1µF
IC16
IC15
C14 1µF
IC17
C15 1µF
+3V3
R21 2,4K
R27 10K
IC15a
1A\
1B
1R\
R
1RCext
1Cext
1Q
1Q\
GPIO0
C17 1µF
74LV221A
D2 TS4148RY
-S0/GPIO0
IC11
ILD205T
D3 TS4148RY
-S0/GPIO1
+3V3
R22 2,4K
R28 10K
IC15b
2A\
2B
2R\
R
2RCext
Rx/Cx
2Cext
Cx
2Q
2Q\
GPIO1
C18 1µF
74LV221A
+3V3
R23 2,4K
R29 10K
IC16a
1A\
1B
1R\
R
1RCext
1Cext
1Q
1Q\
GPIO2
C19 1µF
74LV221A
D4 TS4148RY
-S0/GPIO2
IC12
ILD205T
D5 TS4148RY
-S0/GPIO3
+3V3
R24 2,4K
R30 10K
IC16b
2A\
2B
2R\
R
2RCext
Rx/Cx
2Cext
Cx
2Q
2Q\
GPIO3
C20 1µF
74LV221A
+3V3
R25 2,4K
R31 10K
IC17b
2A\
2B
2R\
R
2RCext
Rx/Cx
2Cext
Cx
2Q
2Q\
GPIO4
C21 1µF
74LV221A
D6 TS4148RY
-S0/GPIO4
IC13
ILD205T
D7 TS4148RY
-S0/GPIO5
+3V3
R26 2,4K
R32 10K
IC17a
1A\
1B
1R\
R
1RCext
1Cext
1Q
1Q\
GPIO5
C22 1µF
74LV221A